OUTLINE DIMENSIONS

MODEL	MX194
UNIT	mm

EIZO Corporation

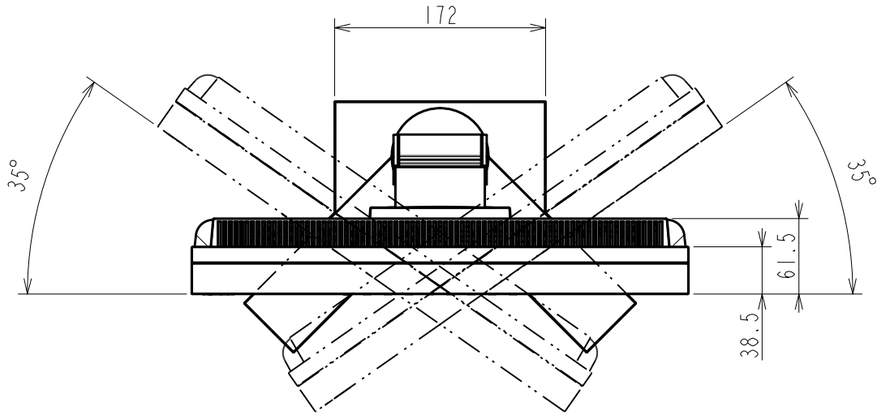

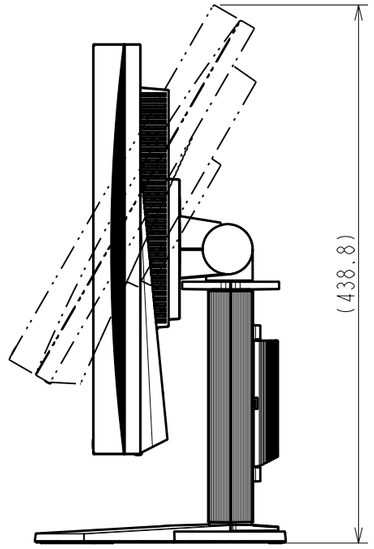

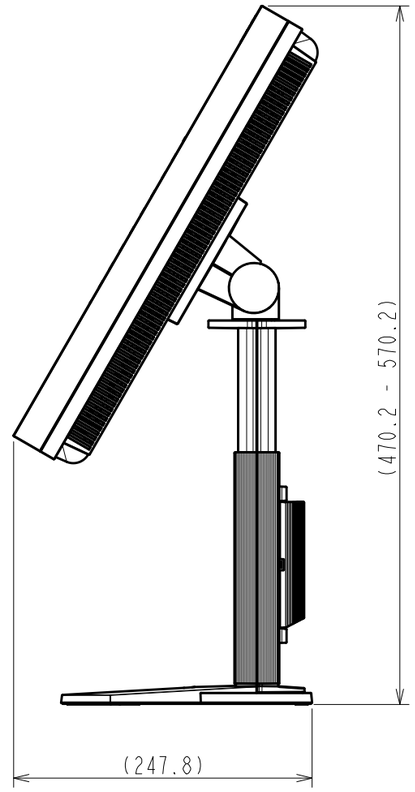

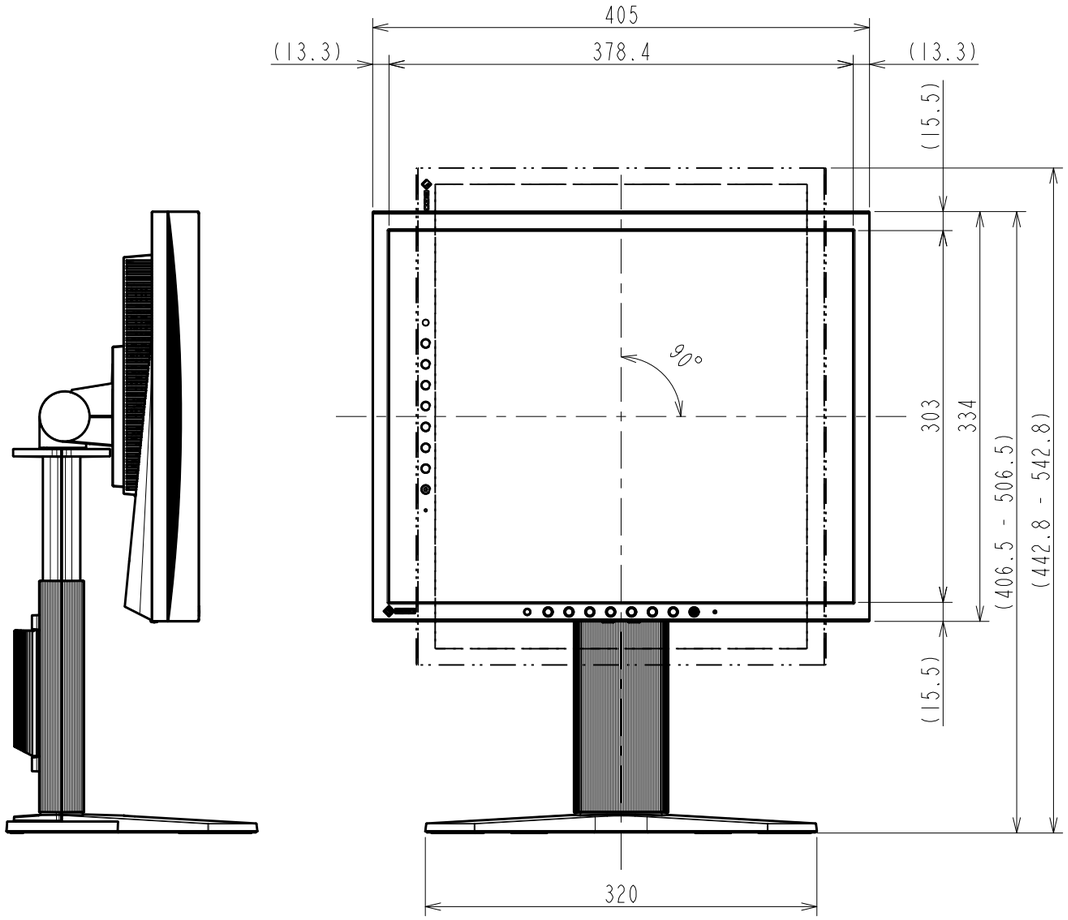

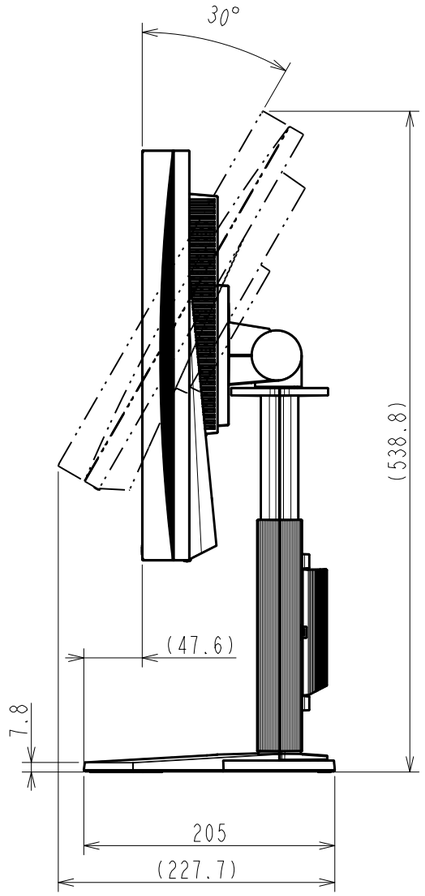

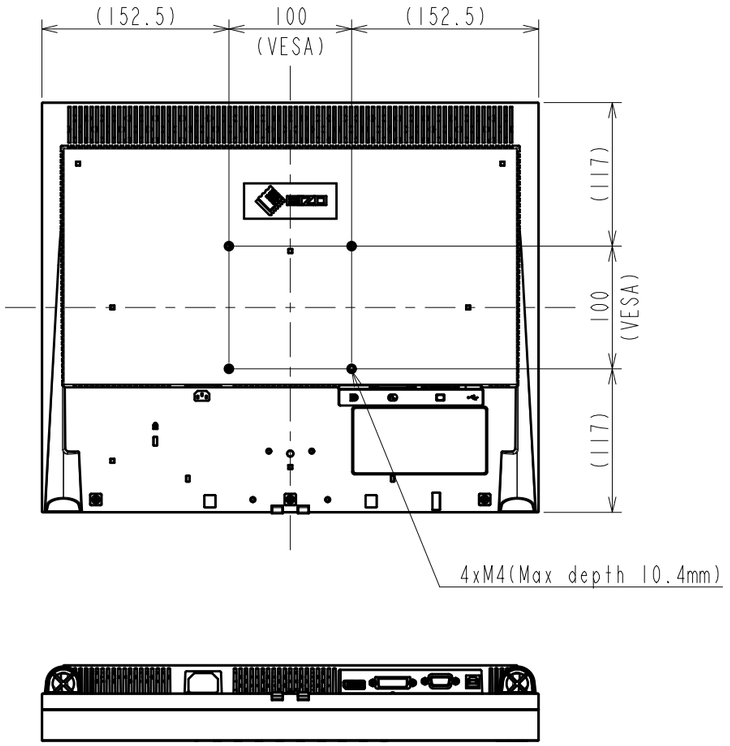

OUTLINE DIMENSIONS

MODEL	MX194
UNIT	mm
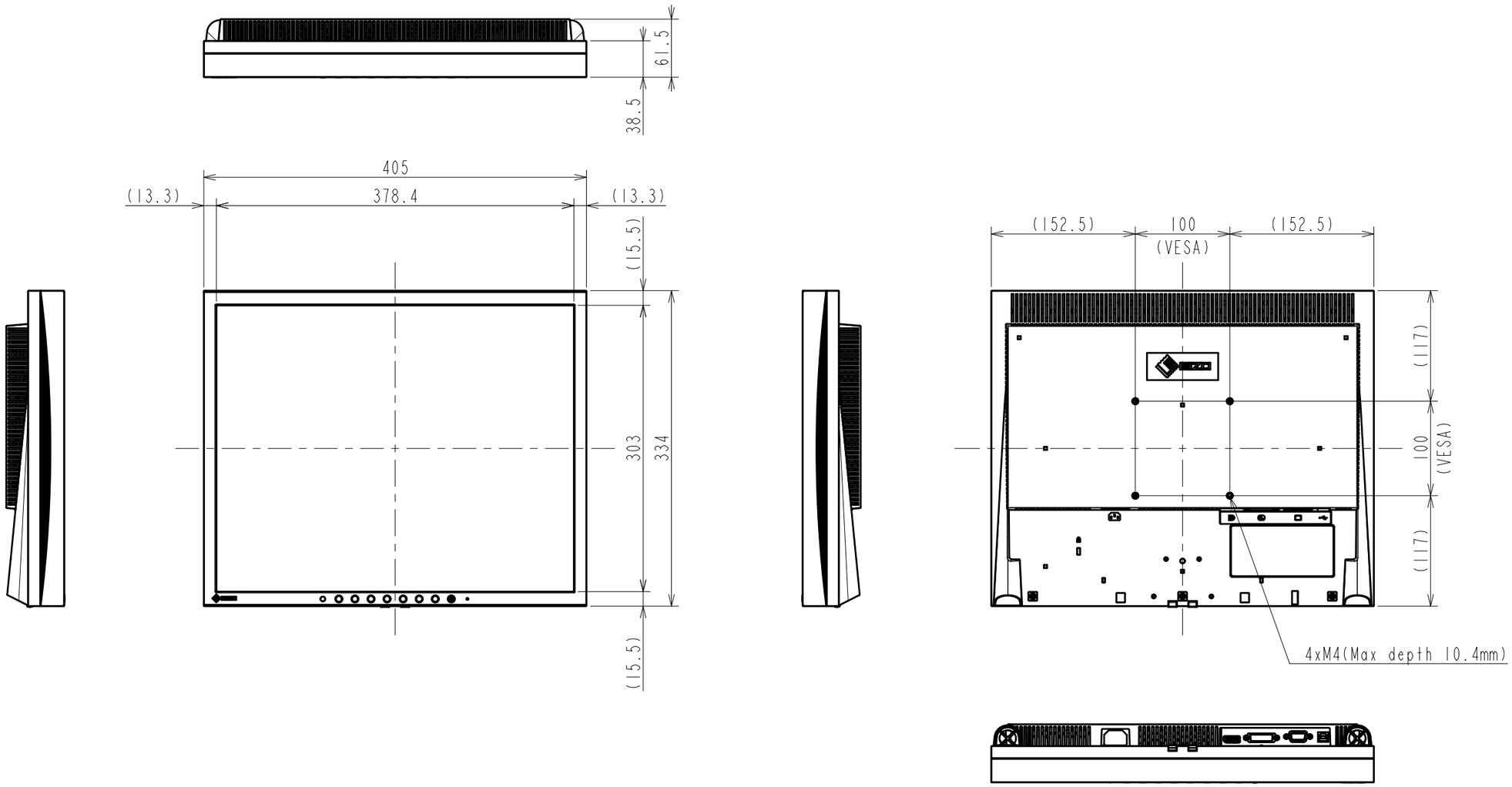
EIZO Corporation